Atlantic®

WG

Product Manual





PS3900 - 74039 | PS4600 - 74040 | PS7000 - 74041
PS15000 - 74037 | BF1600 - 73934 | BF1900 - 73935
BF2600 - 73936 | BF3800 - 73937

1.330.274.8317
www.ATLANTIC-OASE.com

Introduction

Thank you for purchasing your Atlantic Water Gardens equipment. You have chosen the finest products available for Water Gardening. The Atlantic Water Garden System uses pond skimmers to house and protect the pump and biological filters to aerate and clean the pond. Biologically active, water gardens work best when Atlantic FilterFalls and Skimmers are combined with bacteria and treatments.

Table of Contents

Pond Volume 2
Surface Area 3
Streambed Construction 3
Placement of the FilterFalls and Skimmer 4

Skimmer

Skimmer Installation 5
Excavating and Setting the Skimmer 5
Attaching the Liner 5
Attaching the Weir Door 6
Plumbing the PS3900 7
Plumbing the PS4600/7000/15000 7

FilterFalls

FilterFalls Installation 8
Bulkhead Installation 8
Setting the FilterFalls 8
Liner Attachment 9

Accessories

Triton Check Valve 10
AF1000 AutoFill Kit 11
Overflow 12
Warranty 12

Pond Volume and Surface Area

It is important to know the volume of your pond not only to select the proper size skimmer and filter, but also to keep maintenance easy. Failing to install the right size skimmer and biological filter will result in increased maintenance for the life of the pond. In addition you will need to know the actual volume of the pond in order to dose the pond accurately with bacteria, medications and other treatments. We recommend calculating the pond volume before construction and re-calculating after the pond is built to ensure an accurate measurement of the actual volume.

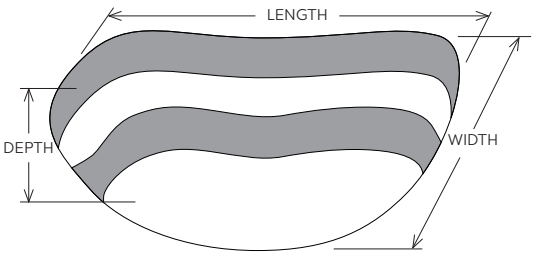

Approximate Volume Of Water In Pond In Gallons:

Average Length x Average Width x Average Depth x 7.5 = Total Gallons in Pond

The surface Area of the pond is also a critical measurement. Upon start-up, the pump draws water from the pond to fill the streambed, from top to bottom, until the water overflows back into the pond to complete the cycle. We call the amount of water needed to complete this cycle the 'transitional' water volume. If the streambed is built improperly, or is built too big, the water level of the pond could drop below the opening in the skimmer before the water levels equalize. This would result in the pump starving for water and running dry.

This situation can be easily avoided by using the formula provided to calculate the surface area of your pond. With that number, you can then determine the maximum surface area of waterfalls and streambed that your pond can accomodate.

To limit the transitional volume of water needed to get the system cycling, the stream surface area should be half of the pond surface area or less.

In the example above/below, the approximate surface area of the pond is 50 square feet, so the stream can be no larger than 25 square feet in area. If a 3.3-foot-wide stream is desired, it can measure no more than about 8 long.

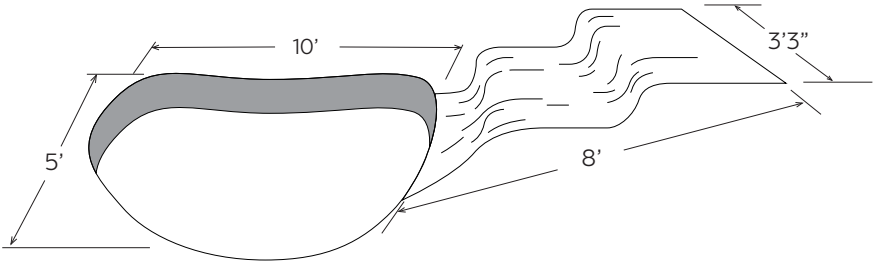

Maximum Area Of Stream (If You Know Your Pond Size)
Average Length of Pond x Average Width of Pond ÷ 2 = Maximum Area of Stream
Minimum Area Of Pond (If You Know Your Stream Size)
Average Length of Stream x Average Width of Stream x 2 = Minimum Area of Pond

Streambed Construction

The less the water level in the pond drops as the pump turns on and the stream fills, the better for proper skimmer function. Proper streambed construction can reduce the amount of water needed for this transition.

Since transitional volume is determined by how high the rock extends above the liner at the spillways, minimizing that height reduces the amount of water necessary to fill the streambed. The drawings to the right display two examples of proper streambed construction to keep the transitional water to a maximum of 3-4" in depth.

Proper Streambed Construction

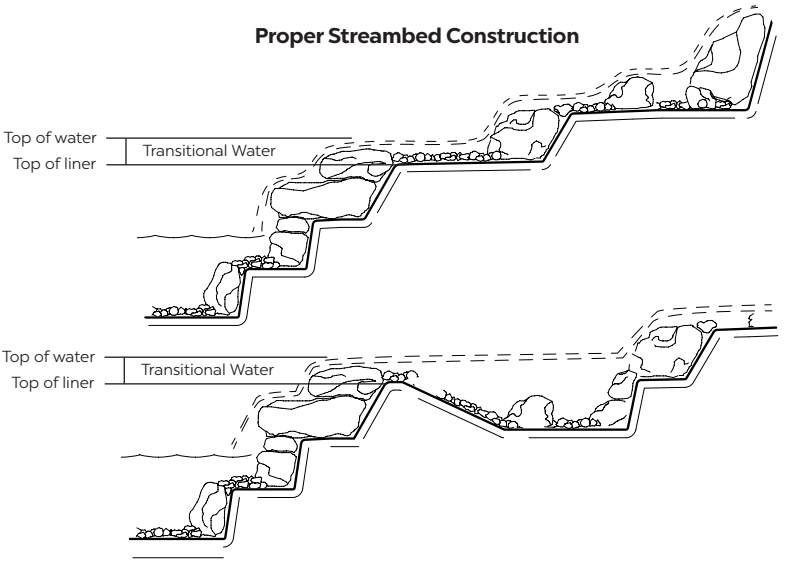

Below is an example of improper streambed construction. Stone, gravel and foam can be combined to make a barrier and create a waterfall, but that barrier will never be watertight. When the pump is turned off, the water will always drain down to the highest point of the liner. Improper construction greatly increases the amount of transitional water.

Improper Streambed Construction

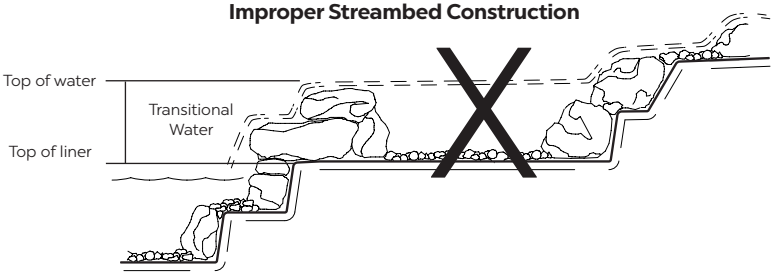

Placement of the Filterfalls and Skimmer

Now that you have determined the size of the pond, waterfalls and filter system, it is time to determine the placement of the components.

Whenever possible, it is best to position the Skimmer and FilterFalls directly across from each other at opposite ends of the pond. This setup creates a current that pulls surface debris into the Skimmer. If the Skimmer and FilterFalls are placed too close together, or the pond has an unusual shape, dead areas can occur. These dead areas can be eliminated with the use of multiple falls or multiple skimmers.

Skimmer Installation

Excavating and Setting the Skimmer

Prior to setting the skimmer you must first determine the surface level of the water in the pond. Once the water level has been set you can excavate for the Skimmer. The excavation should be a few inches wider and longer than the Skimmer body. Find your model number below to determine the approximate depth of the hole.

Do not dig too deep. The skimmer should be set on undisturbed earth if possible. In the case that you over-dig, be sure to compact the soil thoroughly to prevent settling. The bottom of the hole should be level side-to-side and front-to-back.

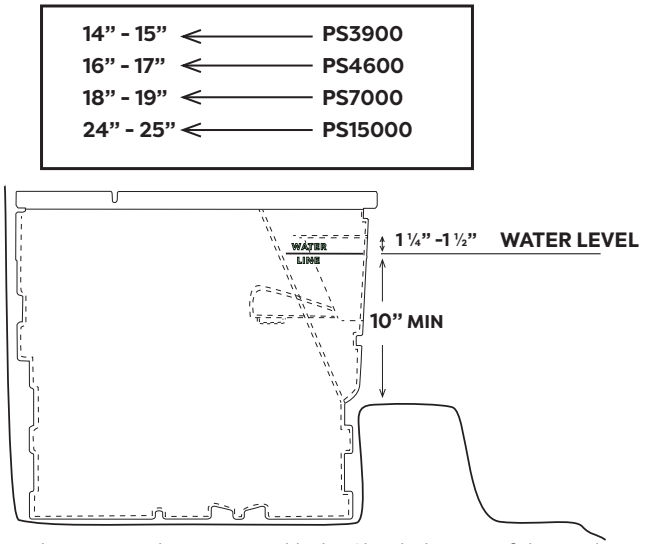

Place the Skimmer enclosure into the excavated hole. Check the top of the enclosure to make sure that it is level front-to-back and side-to-side. Check where your pre-determined water level falls on the face of the Skimmer enclosure. The water level needs to be between 1¼" and 1½" below the top of the weir door opening and/or even with the water level indicator molded on the side of the Skimmer.

Make sure that any unexcavated soil that is left in front of the Skimmer is at least 10" below water level. See the drawing above. This will ensure that there is enough room for the weir door to be installed and function properly.

Before you go any further into the Skimmer installation, place a few stones inside the Skimmer enclosure to weigh it down and keep it from moving. Install the solid support bar(s) and begin backfilling. The support bar(s) must be in place for the enclosure to retain its shape during the backfilling process. Loosely backfill the enclosure on all sides, lightly compacting as you go. Do not over-compact the soil. Aggressive compaction may deform the enclosure and cause components to fit improperly.

Attaching the Liner

Hold the liner up against the face of the Skimmer, allowing a minimum of 2" to extend above the top of the enclosure. Be sure to leave some slack in the liner below the weir opening. This will help avoid any future strain on the liner connection if the soil settles.

Make sure that the front surface of the Skimmer and the back side of the liner are clean and free of debris.

When you are satisfied with the position of the liner, clip it in place with the provided spring clips. With a sharp razor knife, cut a hole in the liner for the weir door using the hole in the face of the Skimmer as a guide. When you are finished, remove the spring clips and pull the liner away from the face of the Skimmer. Apply Atlantic's fish-safe RTV Silicone Sealant around the weir door opening on all four sides.

Apply the silicone in a full, continuous bead approximately ¾" away from the opening itself, directly on top of the bolt holes. Once you are finished, you can return the liner to its original position and replace the spring clips.

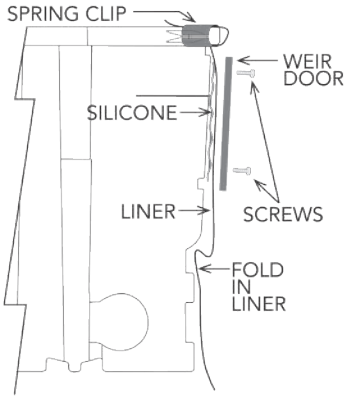

Attaching The Weir Door

Unlatch the weir door and lower the door to its fully open position. Insert the weir door assembly into the Skimmer opening and push the weir door frame tight against the Skimmer face.

Line up the holes of the weir door frame with the holes in the Skimmer face. Use a nail or an awl to help line up the holes and pierce the liner in the top corners. Loosely fasten the top corners using two of the supplied 1/4-20 machine screws and serrated flange nuts. Next, install two screws in the bottom corners of the weir door frame. Once you have the weir door tacked at the corners, install the rest of the screws. Do not fully tighten any screws until all of the screws have been installed.

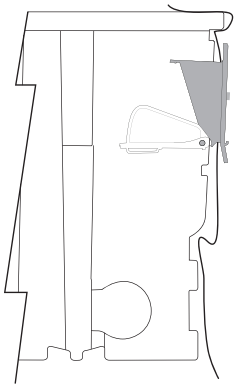

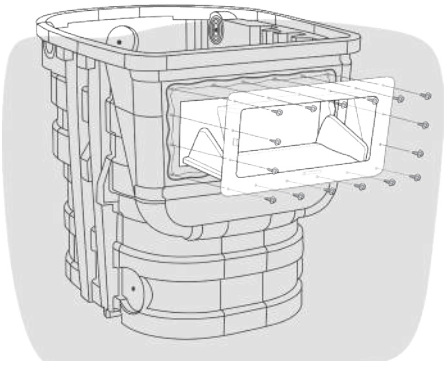

Use your fingers to hold the flange nut and a hand held screwdriver to tighten the screws. The serrations on the flange nut will grab the plastic enclosure once it makes contact, eliminating the need to use a wrench. Use caution when tightening the screws. The screws need only be snug for the silicone to make a seal.

Plumbing The PS3900

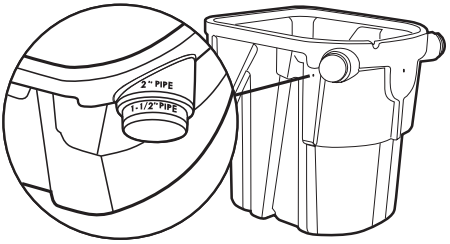

The PS3900 Skimmer has pump discharge step fittings molded into each side of the Skimmer enclosure. The step fittings are labeled for 1½" or 2" PVC pipe and have cut lines molded in for each size. Choose the step fitting on the side of the skimmer that best suits the installation. Using a PVC saw or standard hack saw, remove the end of the step fitting (making sure to follow the molded cut line) for the size pipe used for this water feature. Once completed, push one end of the PVC supply line through the step fitting allowing approximately 10" of pipe to enter the skimmer enclosure.

Plumbing the PS4600/7000/15000

The PS4600/7000/15000 Skimmers do not come with a pre-drilled pump outlet. Not having a pre-drilled pump outlet gives the professional installer the flexibility to choose which side of the enclosure to exit and with what size pipe. Drill-points have been provided on all models to show the proper location for drilling the outlet. See right drawing for drill-point locations and hole sizes. Using the drill-points ensures that the pipe outlet will be above water level.

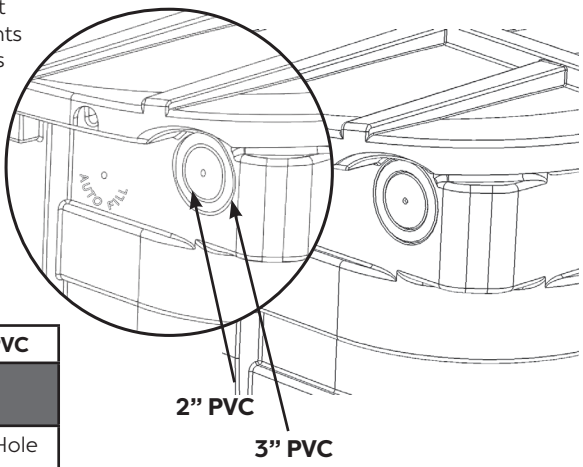

	2" PVC	3" PVC
PS4600	2½" Hole Saw	
PS7000	2½" Hole Saw	3¾" Hole Saw
PS15000	2½" Hole Saw	3¾" Hole Saw

It is recommended that you install a TR215CV Triton Check Valve between the pump and the supply line. This valve will prevent the FilterFalls from draining when the pump is off, which keeps the beneficial bacteria alive and any debris that the FilterFalls has collected from back flowing debris into the pump, skimmer and pond when the pump is turned off. Refer to the Triton Check Valve installation instructions on page 10 for further details.

A drill point on both sides of the Skimmer shows the proper location for the installation of an AF1000 Auto Fill valve (not included). See the Auto Fill installation instructions on page 11 for more information. There is a drill-point provided on the back of the Skimmers to show the proper location and elevation for the installation of an overflow (not included). See the Overflow installation instructions on page 12 for more information.

FilterFalls Installation

Bulkhead Installation

Install the bulkhead fitting and Male Thread Adapter (MTA)(included) before setting the FilterFalls. FilterFalls are not pre-drilled, to give the professional installer the flexibility to choose which panel of the FilterFalls the plumbing will enter. Drill-points on every panel indicate precisely where to drill for the bulkhead fitting. The table below shows which bulkhead is supplied with each FilterFalls and what size hole saw should be used. (Note: If you are installing an optional BFK100 Back Flush Kit (PS4600/PS7000/PS15000 only), this is a good time to drill for the bulkhead fittings.) See the Back Flush installation instructions for more information.

Remove the retaining nut and plastic friction washer, leaving the rubber gasket on the body of the bulkhead fitting. Note that the retaining nut has reverse threads. Turn **clockwise** to loosen.

From the inside of the FilterFalls, insert the threaded end of the bulkhead into the hole. This will sandwich the rubber gasket between the flange of the bulkhead and the inside wall of the enclosure. Slip the friction washer over the threaded end of the bulkhead on the outside of the enclosure and install the retaining nut. Tighten the retaining nut by hand and then finish off with a half turn from a wrench. Note that the retaining nut has reverse threads. Turn **counterclockwise** to tighten. Apply the included silicone on the threads of the MTA. Screw the MTA into the bulkhead until tight.

MODEL	1½" Bulkhead	2" Bulkhead	3" Bulkhead
BF1600	X		
BF1900		X	
BF2600		X	
BF3800			X
	Pre-drilled	3" Hole Saw	4.5" Hole Saw

Setting the Filterfalls

It is always recommended that the FilterFalls be placed on undisturbed soil if possible. If the installation calls for the FilterFalls to be elevated above existing grade, it is critical to compact the area thoroughly. This will ensure that the FilterFalls will not settle out-of-level over time. The use of cinder blocks or bricks on undisturbed soil under the falls to raise it up will help reduce the chance of settling.

The FilterFalls can be placed adjacent to the pond edge to create a single waterfall, or pulled away from the pond to create a stream. Refer to the surface area recommendations on page 3 to ensure that the stream is properly sized.

Once you have placed the unit, make sure it is level from side to side and check the level from front to back. FilterFalls should always be installed tilted slightly forward about ¼". This will ensure that water never leaks out over the back of the enclosure. When you are finished positioning the unit, weigh it down with a few rocks to keep it in place while you make your liner and plumbing connections. Use PVC Glue (not included) to glue the PVC flex hose into the MTA.

Do not backfill the FilterFalls until all of your plumbing connections are made and the liner has been attached.

Liner Attachment

Atlantic FilterFalls come equipped with a solid spillway, threaded inserts and a 'U' shaped wrap-around flange to provide the best possible seal.

Start by positioning the liner. Pull the liner up the face of the FilterFalls and drape a minimum of 6" of liner over the top of the enclosure. Use the provided spring clips to temporarily hold the liner in place. Leave some excess slack in the liner below the spillway to alleviate any future strain on the liner connection if soil or stone shifts or settles. This will help to alleviate any future strain on the liner connection. With the liner firmly in place, use a sharp razor knife

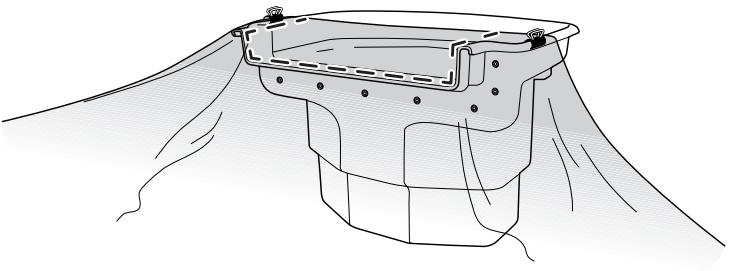

Remove the spring clips and pull the liner away from the face of the enclosure. Make sure that the front of the FilterFalls and the back side of the liner are clean and free of debris. Apply a full, continuous bead of Atlantic fish-safe RTV silicone to the face of the FilterFalls along the center line of the threaded inserts.

Return the liner to the face of the FilterFalls and hold it in place by attaching the spring clips to the rolled lip on either side of the spillway.

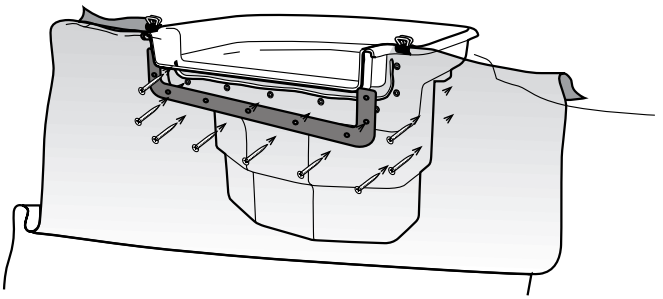

Attach the liner flange to the FilterFalls, starting with the center screw first, and then work out toward the sides of the spillway. It may be necessary to first pierce the liner with a nail or an awl before inserting the screw. Do not fully tighten any screws until all the screws have been installed. Once completed, trim away any excess liner as needed.

Tighten flange screws with a hand held screwdriver only. Over tightening the screws could strip out the inserts or crack the liner flange. The screws need only to be snug for the silicone to make a seal.

Accessories

Triton Check Valve

Locate the model number of the Atlantic Skimmer and TidalWave pump used for this installation on the chart below. Follow the corresponding column down and row across until they intersect. The number or letter at the intersection point is the 'perfect cut' reference mark for this installation. If the corresponding reference mark is a letter, then the 1½" threaded end of the PVC discharge pipe will be used. If the corresponding reference mark is a number, then the 2" threaded end of the discharge pipe will be used.

Discharge Pipe 'Perfect Cut' Reference Chart

	PS3900	PS4600	PS7000	PS15000
TT1500	B	D	H	H + EXT
TT2000	B	D	H	H + EXT
TT3000	B	D	H	H + EXT
TT4000	B	D	H	H + EXT
TT5000	0	2	5	5 + EXT
TT6000	0	2	5	5 + EXT
TT7500	N/A	N/A	4	4 + EXT
TT9000	N/A	N/A	4	4 + EXT
SH1450	E	G	I	I + EXT
SH2050	E	G	I	I + EXT
SH3600	E	G	I	I + EXT
SH5000	N/A	D	H	H + EXT
SH6500	N/A	D	H	H + EXT
PAF-20	3	4	7	7 + EXT
PAF-25	3	4	7	7 + EXT
PAF-40	3	4	7	7 + EXT
PAF-75	3	4	7	7 + EXT
A-05	3	5	7	7 + EXT
A-05L	2	4	6	6 + EXT
A-21	2	4	6	6 + EXT

Shaded areas denote pumps that exceed maximum flow rates or dimension for use with the corresponding Skimmer. Use of this equipment combination is not recommended and could void the warranty.

Locate the correct reference mark for this installation on the discharge pipe. Using a hacksaw or PVC saw, cut the pipe at this mark being careful to make a clean, square cut. Discard the end of the discharge pipe that will not be used.

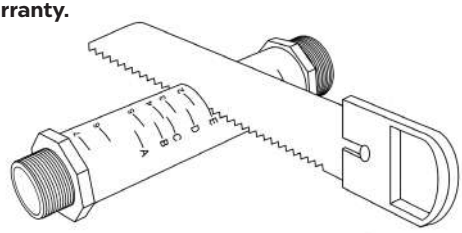

Use a small piece of sandpaper to smooth out the cut end of the discharge pipe. Clean the 2" socket fitting on the bottom of the check valve and the cut end of the discharge pipe with PVC cleaner/primer. Apply PVC glue and insert the discharge pipe into the 2" socket fitting. Hold the discharge pipe firmly in place for a few seconds, giving the glue time to set. Attach the Triton Check Valve to the TidalWave pump by threading the discharge pipe into the pump discharge.

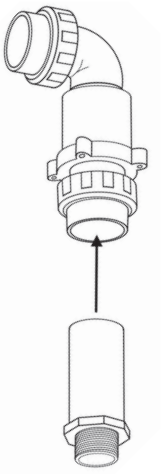

Place the TidalWave pump with installed Triton Check Valve into the Skimmer. Connect the outlet fitting of the Triton Check Valve to the PVC supply line that feeds the waterfall using PVC glue and cleaner. For your convenience, 2" and 1½" outlet fittings are supplied with the Triton Check Valve.

Complete installation by hand tightening the union nuts on the Triton Check Valve. **Do not over tighten.** For more detailed instructions, refer to the instruction booklet included with the check valve.

AF1000 Auto Fill Kit

Drill points have been provided for the proper Auto Fill location on either side of the Skimmers. It is a good idea to completely install the pump, check valve assembly and discharge hose before you drill for the Auto Fill. This will help you determine the best side of the Skimmer to place the Auto Fill so that it has proper clearance on all sides.

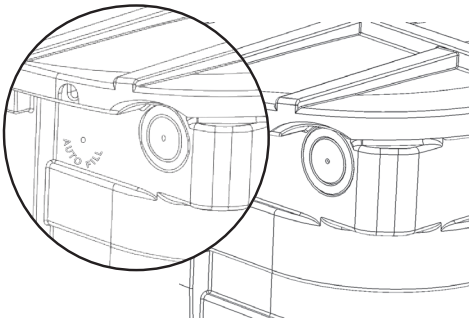

Once you have determined the location of the Auto Fill, drill a ⅞" hole using a spade bit or hole saw. Insert the Auto Fill, making sure the gasket is on the water side of the unit, and the plastic retaining nut is on the outside. Thread the retaining nut onto the Auto Fill Valve, being careful not to over-tighten.

The Auto Fill Kit includes fittings for connection to a garden hose, ½" irrigation line, and ½" Sch 40 PVC. Wrap the ½" male threads on the Auto Fill with thread sealant and install the fitting of your choice. Once water is supplied to the Auto Fill it will maintain the set water level by automatically adding water when the level drops. This level can be adjusted by loosening the wing nut and raising and lowering the height of the Auto Fill float.

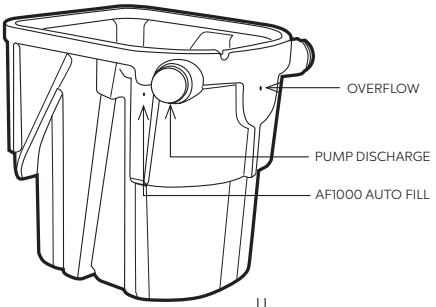

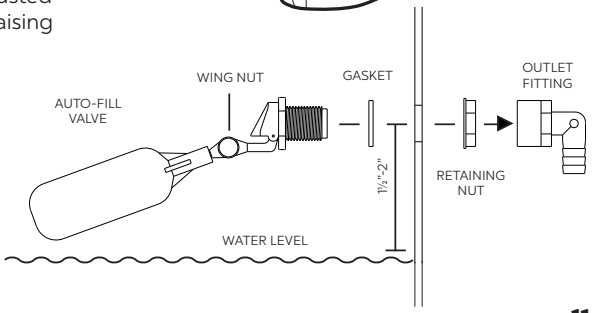

Overflow

A drill-point has been provided on the back of the Skimmers to show the proper location and elevation to install an Atlantic HA2000 bulkhead fitting and 2" MTA for the overflow (not included). This combination will position the bottom of the overflow pipe approximately 1" above recommended water level. (Note: If a HA2000 bulkhead is not being used, the center point for the hole will have to be recalculated on site.)

Drill a 3" hole and install the bulkhead following the instructions on page 8. Install a 2" MTA and connect the overflow pipe. Apply silicone on the threads of the Male Thread Adaptor (MTA). Screw the MTA into the bulkhead until tight. Use PVC Glue and cleaner (not included) to glue the PVC flex hose into the MTA.

Warranty

All Atlantic Skimmers and FilterFalls carry a limited lifetime warranty. This warranty is extended solely to the original purchaser commencing from the date of original purchase receipt. The following limitations apply:

- Filter pads, brushes and nets are wearable components and not covered by this warranty.
- A misused or abused product voids this warranty.

Skimmer Accessories (AF1000 Auto Fill Kit and TR215CV Triton Check Valve) included in this manual carry a one-year warranty.

This warranty excludes labor/cost of labor for removal or installation of any product.

Warranty Claims

In case of warranty claims, the complete product should be returned to the place of purchase accompanied by original receipt.

Atlantic®
1.330.274.8317
www.ATLANTIC-OASE.com

74912/3-21