Guarantee

- This card ensures quality service for products purchased from our company.
- The warranty period is 2 years, starting from the date of the sales invoice (or the purchase date). Please fill in the date on this card.
- Quick-wear parts of the pump are not covered under the warranty.
- Damage resulting from improper use or intentional damage is not covered by the warranty.

WARRANTY CARD(Leaf For Retailer)

Model No.			Date of purchase		
User			Address		
Zipcode		Phone		Contact person	
Retailer					

PMAO Series

All In One Filter

INSTRUCTIONS



www.Pond-Magic.com
5921 LOWER YORK RD.
NEW HOPE, PA 18938

POND MAGIC
PUMP UP THE MAGIC, FILTER OUT THE MESS!

Warning

Please read the operating instructions and ensure you are familiar with the equipment before using it. Safe and proper operation of the system requires strict adherence to the safety guidelines. For safety reasons, this device must not be used by children or individuals under 16 years old, those unable to recognize potential hazards, or those unfamiliar with these instructions.

Caution

The PMAO is a UV-C clarification device that can be combined with other equipment. It includes a water pump and a UV-C lamp. Any damage to the equipment or improper operation can result in hazardous radiation exposure to the skin and eyes. If the equipment is damaged, it must not be used.

This device is not intended for use by individuals (including children) with reduced physical, sensory, or mental capabilities, or those lacking experience and knowledge, unless supervised or instructed by someone responsible for their safety.
The equipment should be kept out of reach of children. For safety reasons, it must not be used by individuals under 16 years old, follow the instructions.

- The equipment must be placed underwater. Ensure it is fully submerged, but the depth should not exceed 6.5 feet
- Never connect the equipment to a power source if there is insufficient water to fully submerge it, as this can cause damage.

Caution

- The UV-C lamp is made of quartz glass, so handle it carefully to avoid dropping or hitting it.
- Do not plug in the equipment until all parts are fully installed.
- If the power cable, UV-C lamp, or housing is damaged, the equipment must not be used and should be discarded.
- Verify that the electrical voltage and frequency match the specifications on the equipment label.
- Follow the installation regulations for pond pumps when setting up the equipment.
- The equipment must be grounded. A professional should inspect the grounding to ensure safety. We strongly recommend installing a leakage protector for additional safety.
- Pulling the connecting cable is prohibited. Keep the cable away from heat, grease, or sharp objects.
- If the pump makes unusual noise, unplug it immediately and inspect the cause.
- Before frost occurs, remove the UV-C filter to prevent frost damage.
- Dirt on the quartz glass tube can reduce the equipment’s effectiveness. Clean the quartz glass tube regularly.
- Sand and debris blocking the body shell can damage the quartz glass tube and water pump. Add a filter sponge to the water inlet, and clean the sponge regularly (at least once a month).
- UV-C radiation is harmful to the eyes and skin. Do not look directly at UV-C light or allow skin contact with it.
- When installing or repairing the equipment, always switch off the power source.

Instructions

- This equipment includes a built-in filter sponge, biological basket, UV-C lamp, and water pump.
- It features an efficient water channel design, suitable for indoor and outdoor pond gardens, aquatic breeding, water sterilization, and fountains.
- The water pump circulates water from the filter cover through the filter sponge and then to the UV-C lamp.
- Inside the UV-C lamp, harmful bacteria and algae are eliminated.
- The cleaned water then flows back out.
- The UV-C lamp is designed as a closed system, ensuring no UV-C light escapes.
- The UV-C light, with a wavelength of 253.7 nm, effectively kills harmful bacteria and algae, maintaining clean and healthy water conditions.

Features

- This product combines filtration, biological bacteria culture, sterilization, pumping, fountain, and other functions in a single unit with a compact and efficient design.
- It features a large filter surface, a well-designed water flow channel, and excellent performance.
- A built-in, independent filter material box allows for easy replacement

Parameters

Model	PMAO5000	PMAO3800
Voltage	110-120V - 60Hz	110-120V - 60Hz
Power	42 Watts	35 Watts
UV Bulb	9 Watts	11 Wats
Max Flow	528 GPH	950 GPH
Hose Adapter	½, ¾", 1"	½" - ¾"
Head Max	6.5 FT	3 FT

Installation

Please switch off the power when you clean the inside of change the UVC lamp. When cleaning the inside or changing the lamp, please check the part list for help

Installation
After assembling the parts according to the diagram, adjust the extension tube to correct height and immerse the unit under water. You can remove fountain assembly and install hose tail for optional use.

Maintenance

Maintenance For Filter Sponge and Filter Material:

- Take fountain parts off and open the two clips on the side of the filter cover. This will open filter cover
- Take out the filter sponge and biological basket, clean sponge, dump excess water, and put back together

Maintenance for UVC Lamp:

- Open pump up unit, remove UVC lamp from unit, open safety buckle, and rotate the lamp head counterclockwise to remove the quartz glass tube assembly. Now you can replace UVC lamp (PMAO-3800 does not need the unit open, rotate the lamp head directly counterclockwise)
- To clean quartz sleeve, remove the fixing nut, then clean

Maintenance For Pump:

- Rotate the impeller cover counterclockwise to the locked position, then open it outward to detach the impeller cover from the pump body.
- Remove the rotor and clean all parts using a small brush.

Winter Storage

- Take out the equipment from the water
- Clean the equipment thoroughly
- Check the part and conditions of the equipment
- Keep this equipment in an area that is frost free and keep the pump in a bucket of water inside

Troubleshooting

TROUBLE	REASON	SOLUTION
Water pump is not working	•No power •Burn •Impeller block	•Plug in •Change water pump •Clean the blocks
Water pump is producing a loud noise	•Something blocked in the impeller room •Rotor or shaft wear and tear	•Open the water pump and clean the blocks •Change the rotor or shaft
Lack of water flow coming from pump.	•Impeller broken or water flow valve closed •Equipment inlet blocked or water pump inlet blocked •Lower voltage than requested	•Change the impeller set or open the water flow valve •Clean the blocks •Use suitable voltage
UV-C light is not working	•No power •UV-C lamp broken •Connection of the UV-C lamp not good	•Plug in •Change UV-C lamp •Re-place the UV-C lamp

Parts PMAO-3800

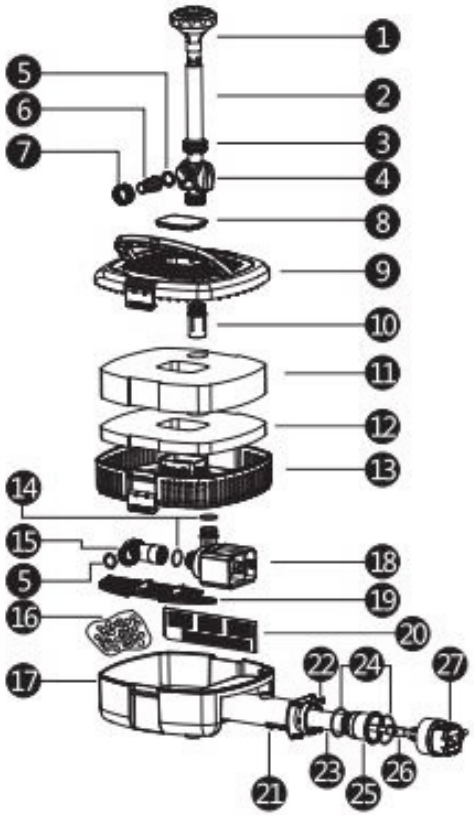

1	Nozzle	8	UV observation window	15	Curved joint	22	Screw
2	Flexible tube	9	Upper filter cover	16	Filter material	23	Quartz glass tube
3	Nut	10	Connection thread	17	Lower filter cover	24	O-ring 2
4	T-joint	11	Coarse sponge	18	Motor	25	Quartz glass tube sleeve
5	Gasket	12	Fine sponge	19	Partition 1	26	UV lamp
6	Outlet	13	Middle filter cover	20	Partition 2	27	UV-C device head with cable
7	Outlet nut	14	O-ring 1	21	UV light shell body		

Parts PMAO-5000

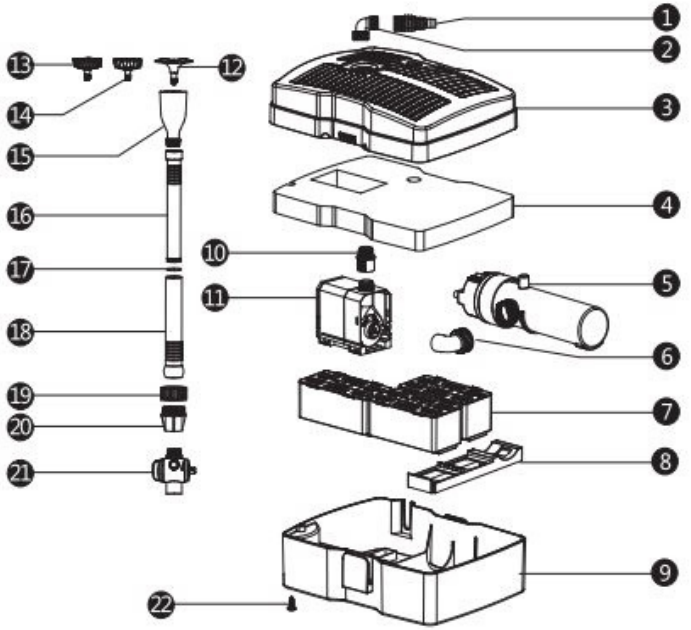

1	Outlet	9	Filter base	17	O-ring
2	Elbow pipe 1	10	Adapter	18	Connection pipe
3	Filter cover	11	Water pump	19	Nut
4	Sponge	12	Fountain head 1	20	Flange
5	UV-C lamp	13	Fountain head 2	21	Tee adjuster
6	Elbow pipe 2	14	Fountain head 3	22	Screw
7	Filter material boxes	15	Fountain sets base		
8	Runner plate	16	Extension pipe		